Technology Readiness Level: 4
Component and/or Breadboard Validation in Laboratory Environment

Eltron Research & Development

Tech Brief

Chemical Looping for Economical, Capture-Ready Coal Combustion

Eltron is developing the <u>lowest cost</u> CO_2 capture system for coal power plants.

New permits for coal fired utilities have been declined due to CO_2 emissions. Consequently, the demand for approaches to carbon emission reduction from coal-based plants has dramatically increased. Although several approaches offer potential promise, chemical looping combustion offers particular cost and performance advantages. Furthermore Eltron's proprietary approach to chemical looping is simpler and more economical than competing development programs.

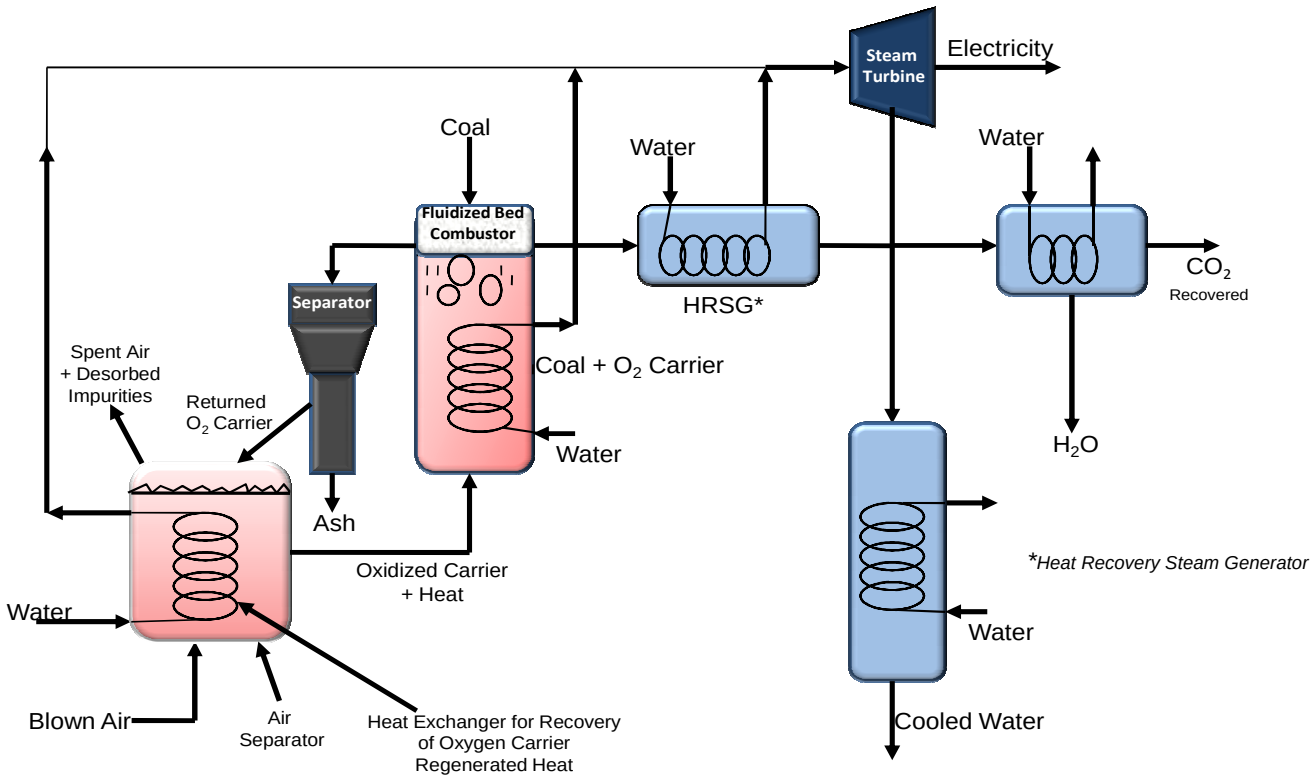

Eltron's process concept employing an oxygen carrier for oxygen separation & coal combustion.

Eltron's chemical looping combustion technology addresses the reduction of CO_2 emissions from coal fired utility boilers based on the direct contact between coal and an oxygen carrier/combustion catalyst. Using a duel bed system, the oxygen carrier extracts oxygen from air in one step and then cycles to the second bed for combustion. The oxygen carriers have been previously identified and have shown amenable to use in fluidized bed systems. Consequently, the process topology and reactor design are similar to that of a fluidized bed combustion (FBC) system or a fluid cat cracker (FCC).

Eltron's combustion system will be the lowest cost CO_2 capture method for retrofitting existing coal fired power plants.

Eltron's chemical looping combustion system offers the following additional advantages:

1. Reduced NOx emissions.
2. Separates oxygen from air without an expensive air separation unit (ASU).
3. Virtually complete separation of depleted air from CO_2.
4. Lower capital cost - only slightly higher than that for FBC.
5. Catalytic combustion of coal with further benefits, including lower combustion temperature and lower thermal NO_x emissions.
6. Low cost oxygen carrier providing advantages over other chemical looping approaches.

Eltron proposes to develop its chemical looping combustion process and system for coal utility applications. Specific technical objectives to be addressed will include:

- Maximization of oxygen storage capacity
- Minimization of oxygen carrier cost
- Separation of oxygen carrier from coal char and ash
- Sequestration of coal-borne impurities
- Attainment of sufficient carrier attrition resistance
- Optimization of combustion kinetics.

The proposed program to address this development will consist of the following major tasks:

1. Materials development and optimization, emphasizing identification of preferred oxygen carriers, including oxygen carrying capacity, catalytic activity and attrition resistance. Sufficient quantities of preferred materials will be prepared to meet program needs.
2. Development of specific unit operations, including solids separation and impurity removal.
3. Demonstration of the process at the bench-scale including generation of material balance information for scale up to a pilot unit.
4. Process engineering and integration into a coal fired utility system
5. Techno-economic evaluation demonstrating advantages over alternatives.
6. Design, fabrication, commissioning, and testing of pilot scale circulating fluidized bed system.

Stage of Development

Eltron has laboratory prototype reactors of this technology, and USPTO patents pending.

Contact Us

To discuss the possibility of entering into a business relationship with Eltron, contact the Business Development Group at business@eltronresearch.com.

Eltron Research & Development

Eltron Research & Development Inc.

Eltron Research & Development Inc. commercializes novel technologies involving advanced materials, energy, water and environmental systems.

4600 Nautilus Court South | Boulder, CO 80301 | Phone: 303.530.0263 | www.eltronresearch.com